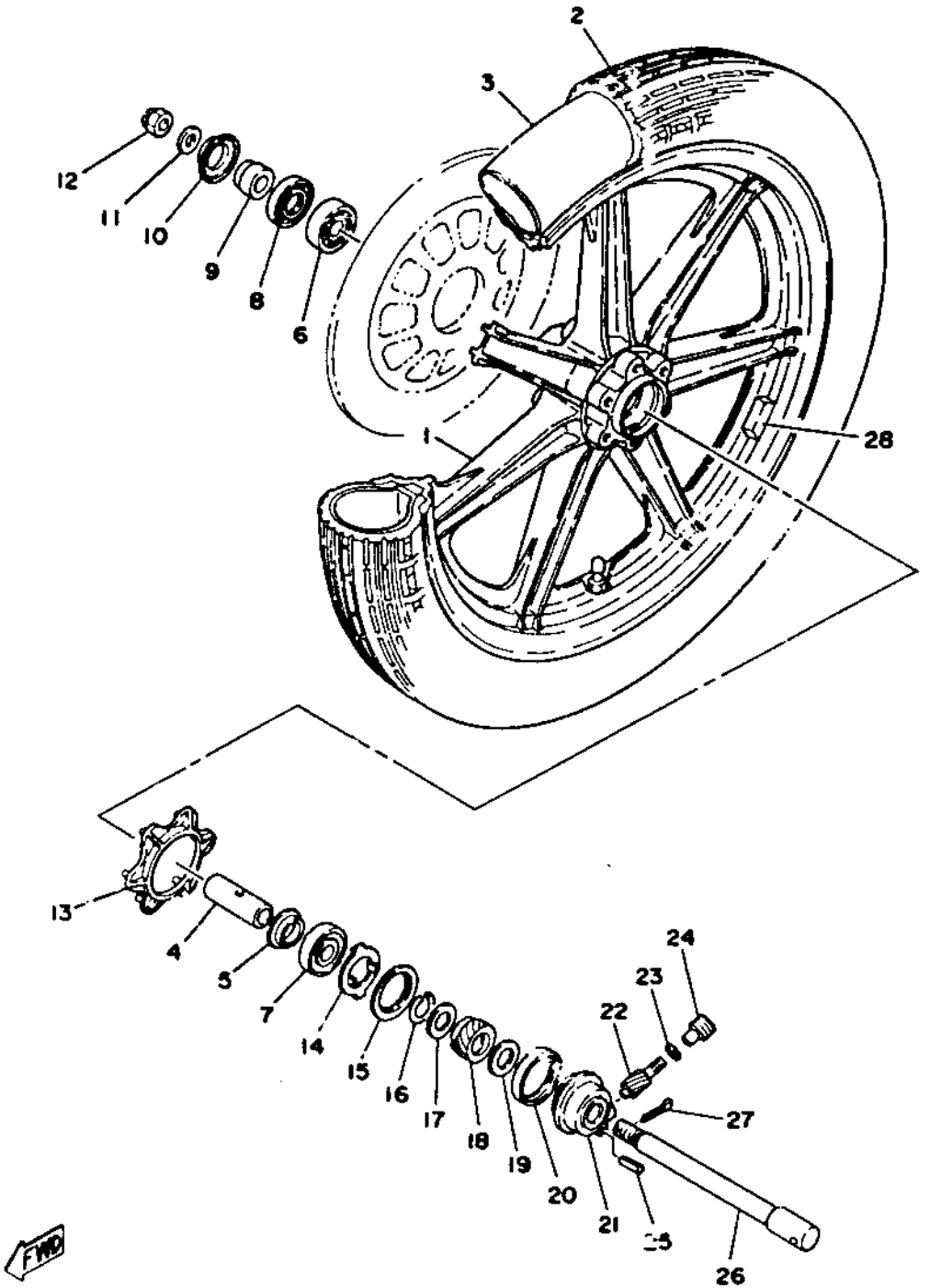

Tires size (nominal pressure)	F:3.50S19 (1.6kg-cm²/22psi) R:130/90S16 (2.0kg-cm²/28psi)

FRONT WHEEL

Ref. No.	Part No.	Description	Qty.	Applicable Machine No.
1	2H7-25168-20-00	CASTING WHEEL, front (1-25-19)	1	
2	94135-19389-00	TIRE, front (3.50-19-4PR)	1	
3	94235-19034-00	TUBE, front (3.50-19)	1	
4	90560-17126-00	SPACER (341-25117-01)	1	
5	1A1-25115-00-00	FLANGE, spacer	1	
6	93306-30303-00	BEARING (B6302Z)	1	
7	93306-30309-00	BEARING (B6302ZZ)	1	
8	93102-28022-00	OIL SEAL (SD-22-42-7)	1	
9	90387-17433-00	COLLAR (341-52183-00)	1	
10	341-25118-00-00	COVER, hub dust	1	
11	92901-14200-00	WASHER, plate	1	
12	90171-14020-00	NUT, castle	1	
13	1U4-25847-00-00	COVER, housing	1	
14	341-25149-00-00	CLUTCH, meter	1	
15	341-25846-00-00	RETAINER, clutch meter	1	
16	341-25137-00-00	RING, stop	1	
17	90201-25286-00	WASHER (341-25147-00)	1	
18	341-25135-01-00	GEAR, drive (27T)	1	
19	90201-25490-00	WASHER (152-17226-00)	1	
20	93105-45017-00	OIL SEAL (SDO-45-56-6)	1	
21	341-25191-01-00	HOUSING, gear unit	1	
22	306-25138-00-00	GEAR, meter (10T)	1	
23	102-18416-00-00	SHIM, rod	1	
24	306-25136-00-00	BUSHING	1	
25	91609-20014-00	PIN, spring	1	
26	341-25181-01-00	SHAFT, wheel	1	
27	91401-30030-00	PIN, cotter	1	
28	1A1-25398-01-00	BALANCER, wheel	U.N	
	1A1-25399-00-00	BALANCER, wheel	U.N	