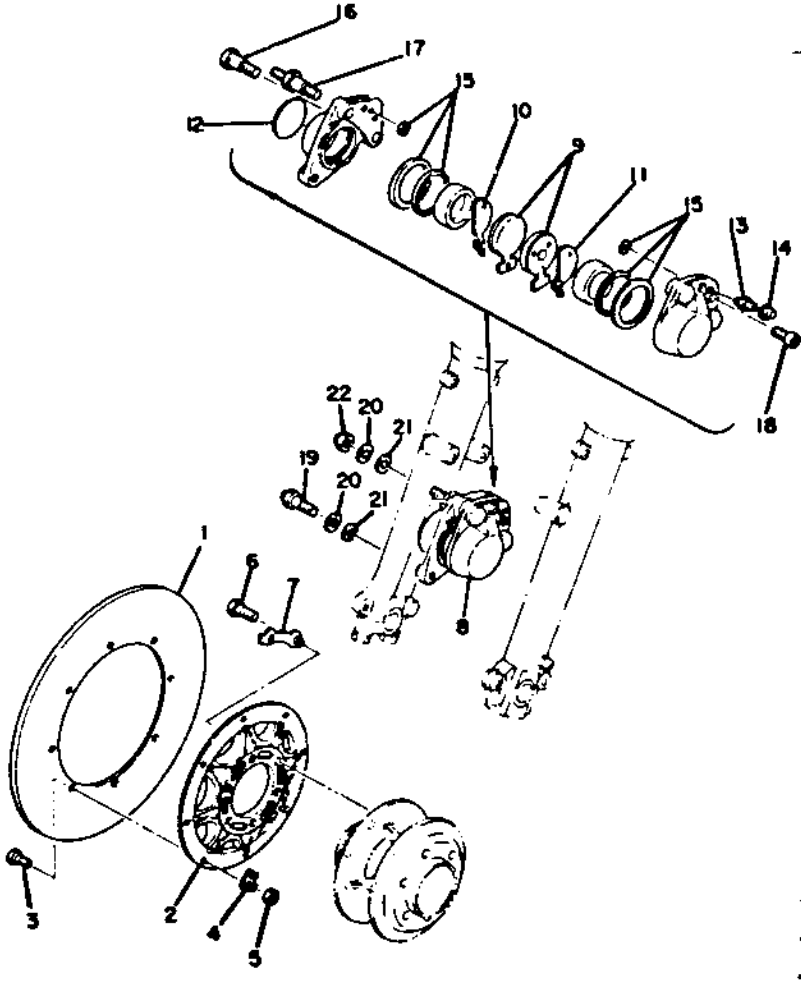

Ref. No.	Part Number	Description	A	B	C
1	306-25831-00-00	DISC, brake	1	1	1
2	341-25832-01-00	BRACKET, disc	1	1	1
3	90109-06018-00	BOLT	8	8	8
4	90215-06106-00	WASHER, lock	8	8	8
5	95301-06600-00	NUT, hexagon	8	8	8
6	90109-08367-00	BOLT	6	6	6
7	341-25412-00-00	WASHER, lock	3	3	3
8	306-25810-0A-00	CALIPER ASS'Y (306-25810-09) (A/B)	1	1	
	533-25810-12-00	CALIPER ASS'Y (C)			1
9	1A1-W0045-00-00	. PAD, caliper (306-25811-06)	2	2	2
10	306-25827-04-00	. SHIM 1 (A/B)	1	1	
	409-25827-50-00	. SHIM 1 (C)			1
11	306-25828-04-00	. SHIM 2 (A/B)	2	2	
	409-25828-50-00	. SHIM 2 (C)			1
12	306-25829-00-00	. EMBLEM, caliper	1	1	1
13	306-25824-00-00	. SCREW, bleed	1	1	1
14	306-25825-01-00	. CAP	1	1	1
15	856-W0047-00-00	. CALIPER SEAL KIT	1	1	1
16	306-25821-01-00	. BOLT, bridge 1	1	1	1
17	306-25822-01-00	. BOLT, bridge 2	1	1	1
18	306-25826-01-00	. BOLT, bride 3	2	2	2
19	90109-10041-00	BOLT (306-25818-00)	1	1	1
20	92903-10100-00	WASHER, spring	2	2	2
21	92903-10200-00	WASHER, plain	2	2	2
22	95303-10800-00	NUT, crown (92803-10700) (A/B)	1	1	
	90176-10013-00	NUT, cap (B/C)		1	1