# SIDE COVER - TOOL TX650A/XS650B/C

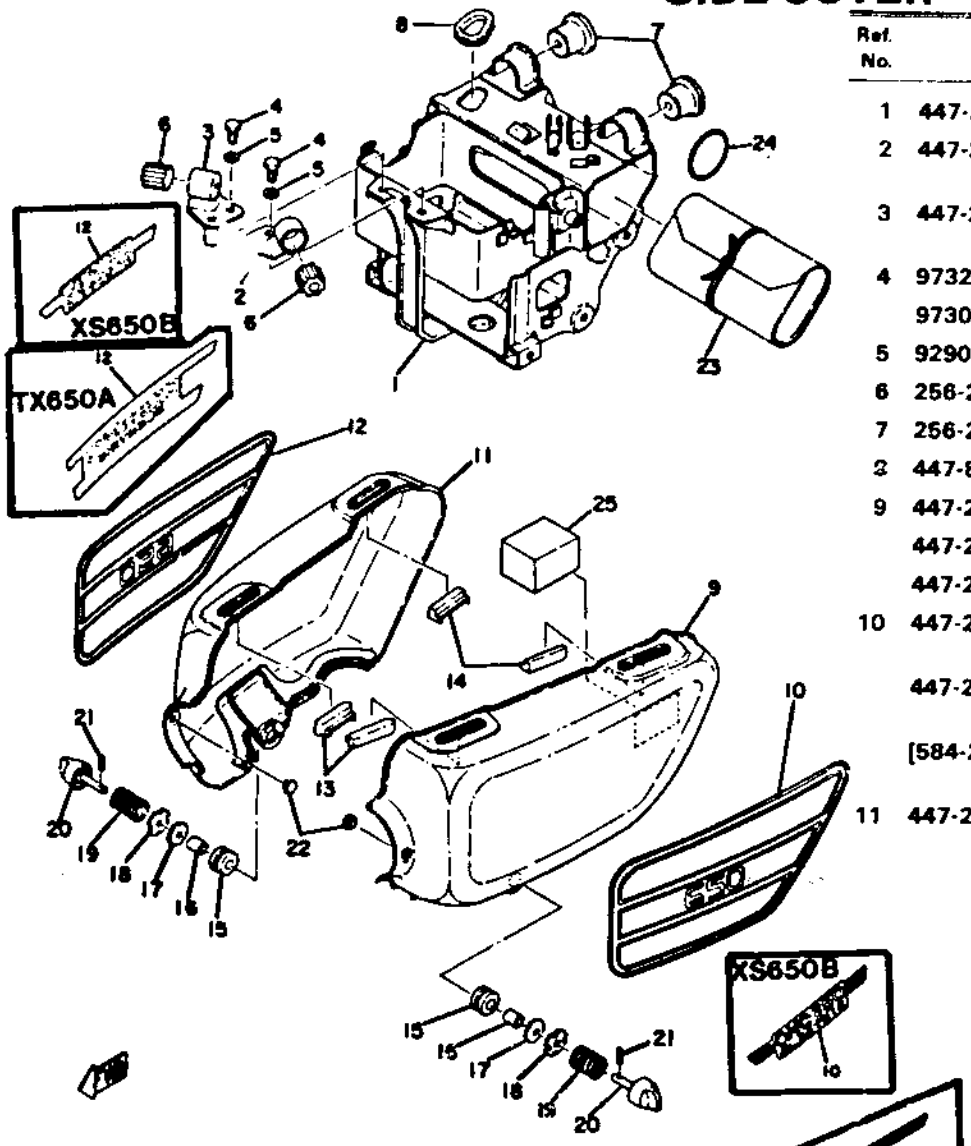


| Ref. No. | Part Number | Description | A | B | C |
|---|---|---|---|---|---|
| 1 | 447-21170-04-33 | BOX CMP..... | 1 | 1 | 1 |
| 2 | 447-21149-00-00 | BRACKET, battery box left..... | 1 | 1 | 1 |
| 3 | 447-21344-00-00 | BRACKET, battery box right ..... | 1 | 1 | 1 |
| 4 | 97321-06016-00 | BOLT, hexagon (A/B) | 2 | 2 | |
| | 97301-06016-00 | BOLT.....(C) | | | 2 |
| 5 | 92903-06100-00 | WASHER, spring .... | 2 | 2 | 2 |
| 6 | 256-21729-00-00 | DAMPER, front..... | 2 | 2 | 2 |
| 7 | 256-21747-00-00 | DAMPER, rear ..... | 2 | 2 | 2 |
| 8 | 447-82128-00-00 | GROMMET..... | 1 | 1 | 1 |
| 9 | 447-21711-01-N9 | COVER, side left...(A) | 1 | | |
| | 447-21711-01-R7 | COVER, side left...(B) | | 1 | |
| | 447-21711-01-G3 | COVER, left side...(C) | | | 1 |
| 10 | 447-21784-00-00 | EMBLEM, side cover left.....(A) | 1 | | |
| | 447-21784-10-00 | EMBLEM, side cover.....(B) | | 1 | |
| | [584-21784-10-00] | EMBLEM, side cover left.....(C) | | | 1 |
| 11 | 447-21721-01-N9 | COVER, side right.....(A) | 1 | | |

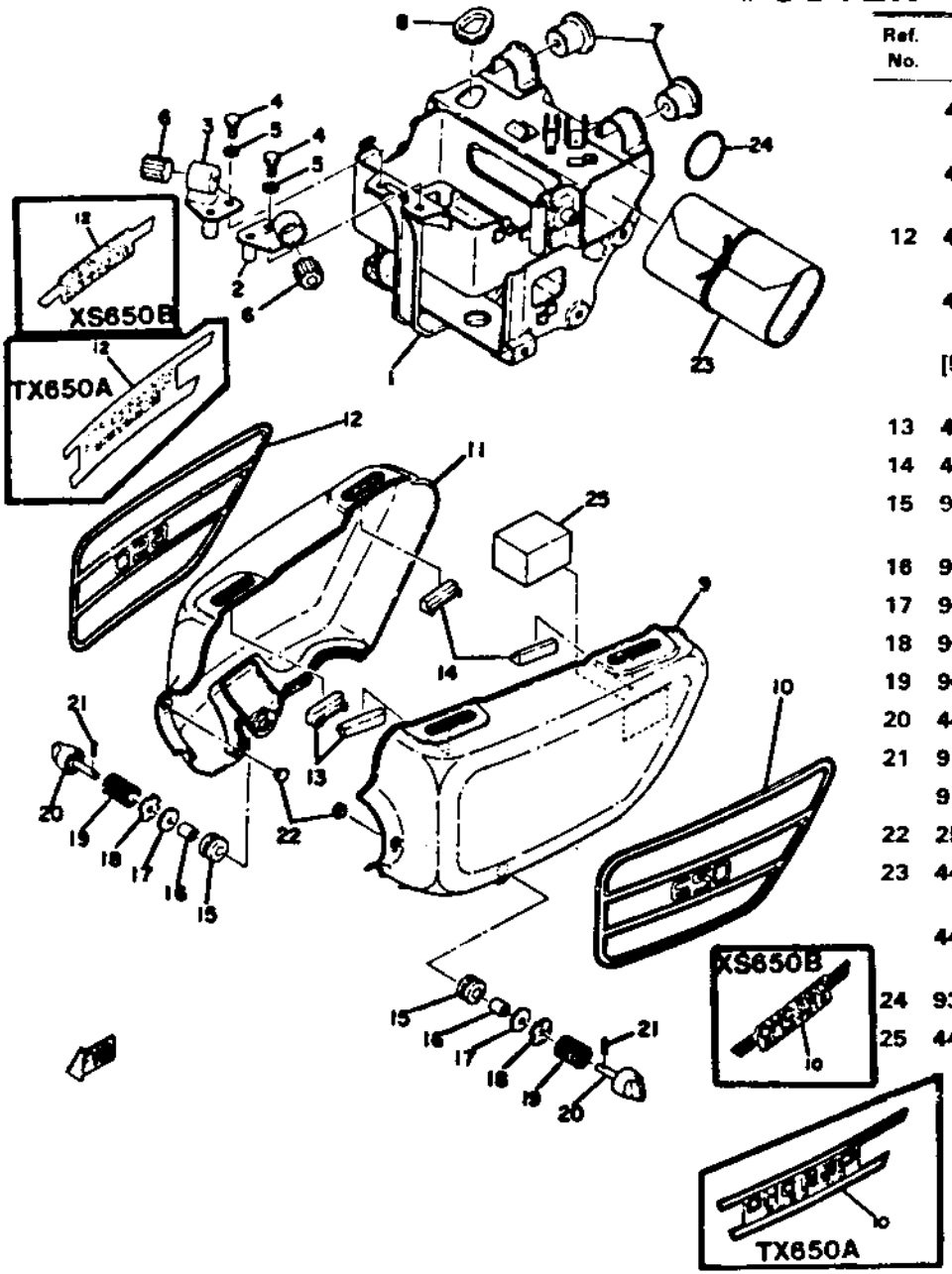


| Ref. No. | Part Number | Description | A | B | C |
|---|---|---|---|---|---|
| | 447-21721-01-R7 | COVER, side right.....(B) | | 1 | |
| | 447-21721-01-G3 | COVER, side right.....(C) | | | 1 |
| 12 | 447-21786-00-00 | EMBLEM, side cover right..... | 1 | | |
| | 447-21784-10-00 | EMBLEM, side cover.....(B) | | 1 | |
| | [584-21786-10-00] | EMBLEM, side cover, right.....(C) | | | 1 |
| 13 | 447-21717-00-00 | DAMPER, side cover | 2 | 2 | 2 |
| 14 | 447-21747-00-00 | DAMPER, side cover | 2 | 2 | 2 |
| 15 | 90480-14023-00 | GROMMET (90480-14102)..... | 2 | 2 | 2 |
| 16 | 90387-07390-00 | COLLAR..... | 2 | 2 | 2 |
| 17 | 90201-06063-00 | WASHER, plate ..... | 2 | 2 | 2 |
| 18 | 90209-06044-00 | WASHER, special.... | 2 | 2 | 2 |
| 19 | 90501-18205-00 | SPRING..... | 2 | 2 | 2 |
| 20 | 447-21714-01-00 | KNOB, side cover.... | 2 | 2 | 2 |
| 21 | 91609-25016-00 | PIN, spring.....(A/B) | 2 | 2 | |
| | 91609-25015-00 | PIN, spring.....(C) | | | 2 |
| 22 | 256-21717-00-00 | DAMPER, side cover | 2 | 2 | 2 |
| 23 | 447-W2810-11-00 | TOOL ASS'Y (447-28100-11) (A/B) | 1 | 1 | |
| | 447-28100-02-00 | TOOL ASS'Y (447-28100-12)...(C) | | | 1 |
| 24 | 93210-40040-00 | O-RING (3-39.5)..... | 1 | 1 | 1 |
| 25 | 447-21746-00-00 | DAMPER, tool box .....(B/C) | | 1 | 1 |