IMPORTANT
Refer to Technical Bulletin M5-090 for headlight mount design change.

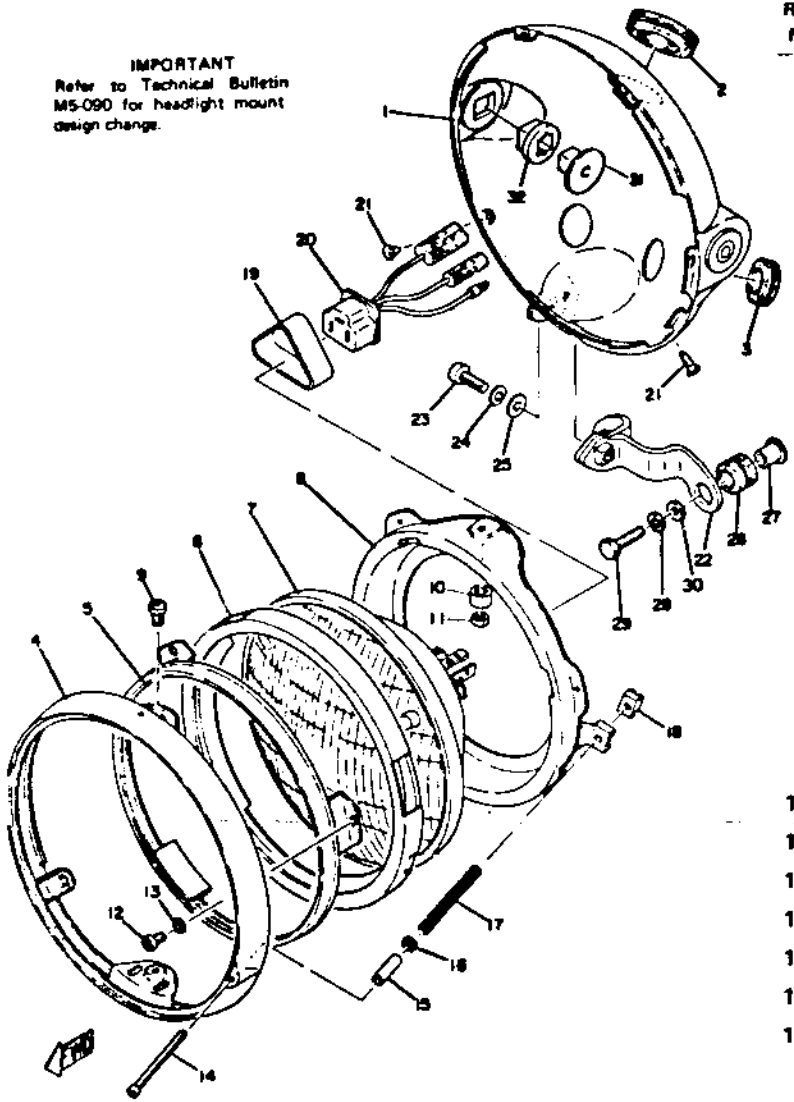

Ref. No.	Part Number	Description	A	B
1	584-84330-62-N9	HEAD LAMP BODY ASS'Y (447-84330-60-N9) (A)	1	
	584-84330-61-R7	HEAD LAMP BODY ASS'Y (584-84330-62-R7) (B)		1
2	214-84153-60-00	. BUSHING	1	1
3	150-84153-00-00	. BUSHING	2	2
0-1		HEAD LAMP UNIT ASS'Y	1	1
4	341-84315-40-00	. RIM, head lamp	1	1
5	447-84395-60-00	. RING, retaining	1	1
6	447-84322-60-00	. PACKING, lens	1	1
7	341-84320-60-00	. LENS ASS'Y (A12V-50/40W)	1	1

TX650Z/XS650

8	447-84394-69-00	. RING, mounting (447-84394-61)	1	1
9	98503-05015-00	. SCREW, pan head	2	2
10	447-84328-61-00	. SPACER	2	2
11	95301-05600-00	. NUT, hexagon	2	2
12	98501-04008-00	. SCREW, pan head	3	3
13	92901-04100-00	. WASHER, spring	3	3
14	341-84331-60-00	. SCREW, adjusting	1	1
15	341-84333-60-00	. SPACER	1	1
16	92901-04200-00	. WASHER, plain	1	1

TX650A/XS650B

HEADLIGHT/TAILLIGHT RATINGS	12V 50W/40W	12V 8W/27W

HEADLIGHT TX650A/XS650B

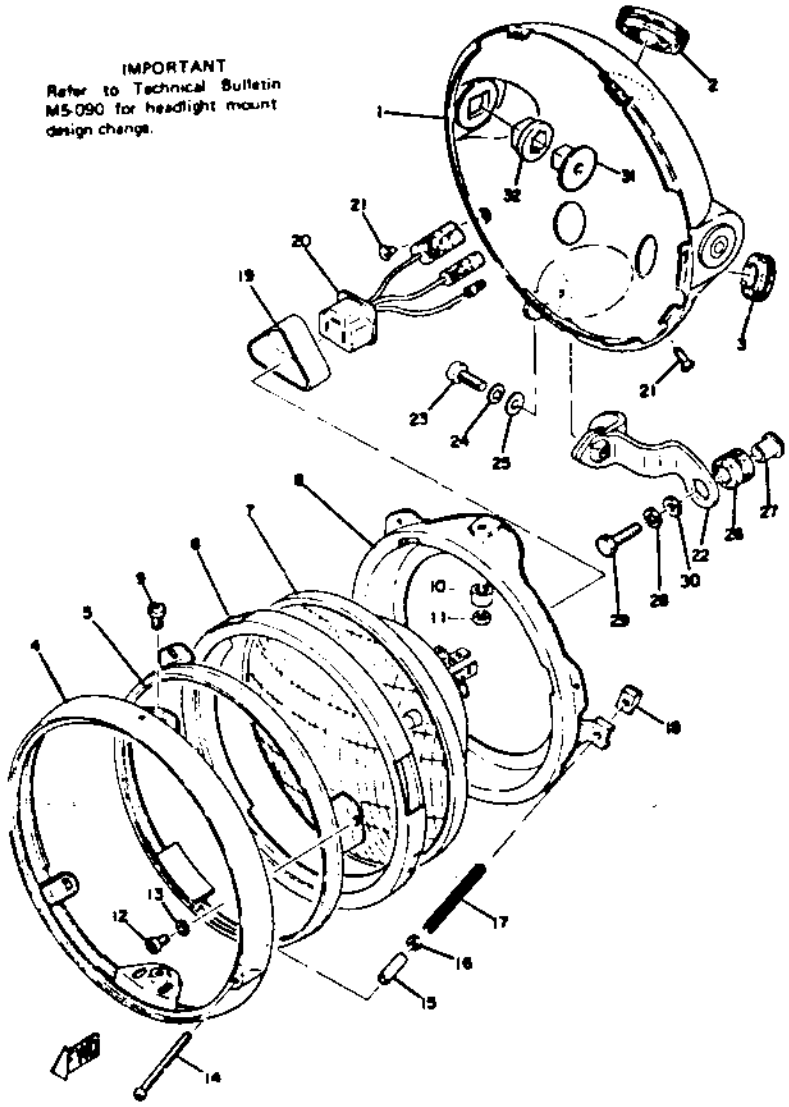

Ref. No.	Part Number	Description	A	B
17	341-84332-60-00	. SPRING, adjusting	1	1
18	198-84334-60-00	. NUT	1	1
19	341-84397-61-00	. COVER, socket	1	1
20	371-84312-60-00	. CORD, head lamp	1	1
21	90152-05005-00	SCREW, rim fitting	2	2
22	447-84318-01-00	STAY, head lamp	1	1
23	92503-06018-00	SCREW, pan head	1	1

TX650A/XS650

24	92903-06100-00	WASHER, spring	1	1
25	92903-06200-00	WASHER, plain	1	1
26	90480-14023-00	GROMMET (90480-14102)	2	2
27	90387-07391-00	COLLAR	2	2
28	92903-06100-00	WASHER, spring	2	2
29	97321-06025-00	BOLT, hexagon	2	2
30	90201-06066-00	WASHER, plate	2	2
31	214-84145-60-00	COLLAR, body fitting	2	2
32	447-84345-00-00	DAMPER, head lamp	2	2

TX650A/XS650B