CARBURETOR TX650A/XS650B

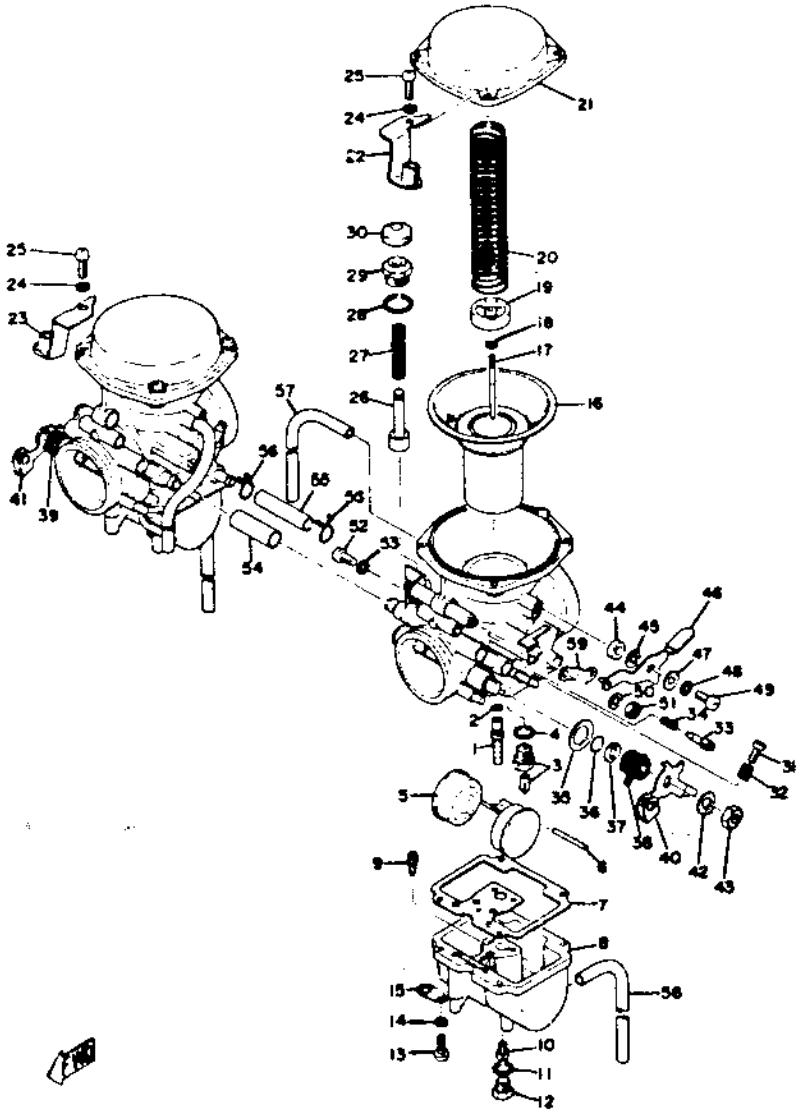

Ref. No.	Part Number	Description	A	B	C
	0-1 447-14901-00-00	CARBURETOR ASS'Y, left	1	1	
	0-2 447-14902-00-00	CARBURETOR ASS'Y, right	1	1	
1	341-14941-84-00	. NOZZLE, main (Z-6)	2	2	
2	93210-03142-00	. O-RING	2	2	
3	168-14190-20-00	. VALVE SEAT ASS'Y (#2.0)	2	2	
4	214-14195-00-00	. WASHER	2	2	
5	256-14985-00-00	. FLOAT	2	2	
6	137-14183-01-00	. PIN, float	2	2	
7	256-14984-00-00	. PACKING, float chamber	2	2	
8	447-14981-00-00	. BODY, float chamber	2	2	
9	256-14942-45-00	. JET, pilot (#45)	2	2	
10	256-14944-25-00	. JET, main (#125)	2	2	
	256-14944-76-00	. JET, main (#127.5)	2	2	
	256-14944-26-00	. JET, main (#130)	2	2	
	256-14944-27-00	. JET, main (#135)	2	2	
11	256-14956-01-00	. WASHER	2	2	
12	256-14991-00-00	. SCREW, plug	2	2	
13	98501-04012-00	. SCREW, pan head	8	8	
14	92901-04100-00	. WASHER, spring	8	8	
15	256-14146-01-00	. PLATE	2	2	
16	256-14940-00-00	. DIAPHRAGM ASS'Y (256-14940-01)	2	2	

TX650A/XS650

TX650A/XS650B

CARBURETOR (MFR) (TYPE) (I.D. NUMBER)	Mikuni BS-38 447A1
MAIN JET	No. 127.5
NEEDLE JET	Z-6
JET NEEDLE/CLIP POSITION	4N6-4
CUT AWAY	No. 120
PILOT JET	No. 45
AIR JET	M.A.J. 1.0φ
STARTER JET	0.7
AIR SCREW (TURNS OUT)	Pilot Screw: ¾"
FLOAT LEVEL	24 ±1mm

CARBURETOR TX650A/XS650B

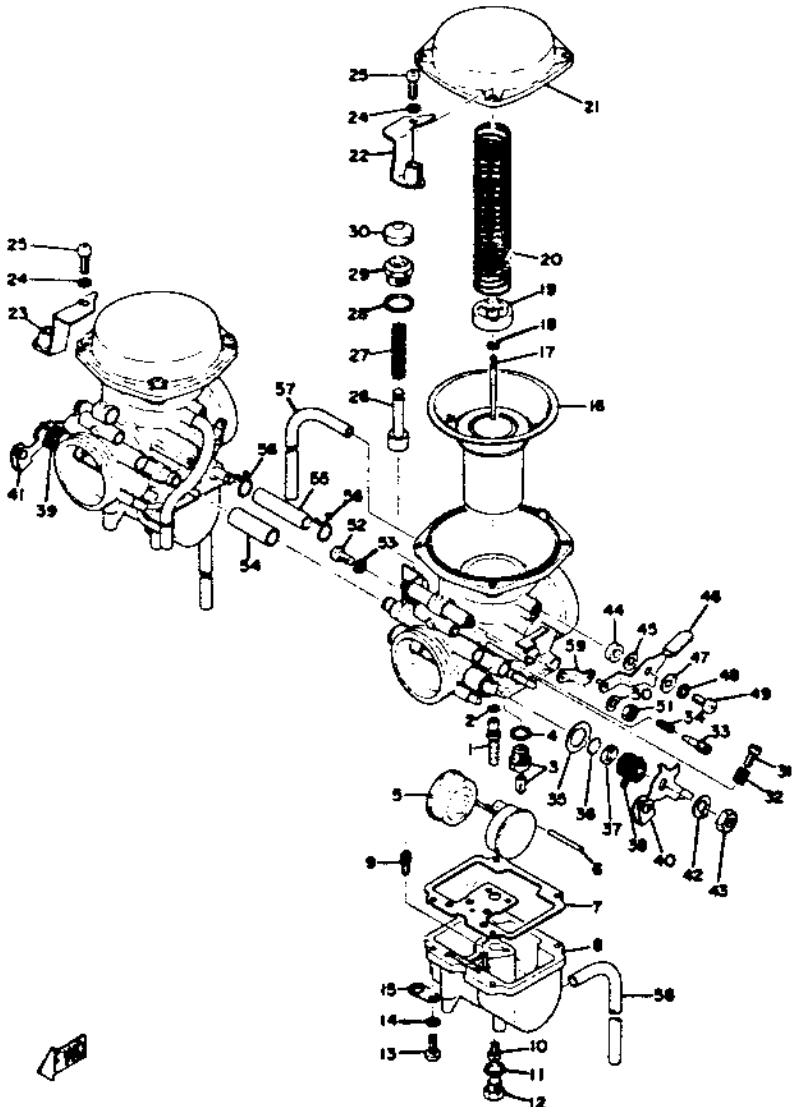

Ref. No.	Part Number	Description	A	B
17	341-14116-08-00	. NEEDLE (4N08-4)	2	2
18	256-14919-00-00	. CLIP	2	2
19	256-14946-00-00	. PLATE, set needle	2	2
20	256-14933-00-00	. SPRING, diaphragm	2	2
21	256-14958-00-00	. COVER, diaphragm	2	2
22	447-14926-00-00	. THROTTLE BRACKET ASS'Y, left	1	1
23	447-14927-00-00	. THROTTLE BRACKET ASS'Y, right	1	1
24	92903-05100-00	. WASHER, spring...	8	8
25	98503-05015-00	. SCREW, pan head	8	8
26	306-14171-01-00	. PLUNGER, starter	1	1
27	256-14135-00-00	. SPRING, plunger...	1	1

TX650A/XS65

28	306-14954-00-00	. WASHER	1	1
29	306-14174-00-00	. CAP, plunger	1	1
30	306-14173-00-00	. COVER, plunger cap	1	1
31	256-14922-01-00	. SCREW, throttle stop	2	2
32	256-14934-01-00	. SPRING, throttle stop	2	2
33	256-14923-00-00	. SCREW, pilot.....	2	2
34	127-14134-00-00	. SPRING, pilot screw	2	2
35	306-14954-00-00	. WASHER	2	2
36	256-14997-00-00	. SEAL (8φ)	4	4
37	306-14970-00-00	. COLLAR, spring....	2	2

TX650A/XS650B

CARBURETOR (MFR) (TYPE) (I.D. NUMBER)	Mikuni BS38 447A1
MAIN JET	No. 127.5
NEEDLE JET	2-8
JET NEEDLE/CLIP POSITION	4N8-4
CUT AWAY	No. 120
PILOT JET	No. 45
AIR JET	M.A.J. 1.0φ
STARTER JET	0.7
AIR SCREW (TURNS OUT)	Pilot Screw: ⅝"
FLOAT LEVEL	24 ±1mm

CARBURETOR TX650A/XS650B

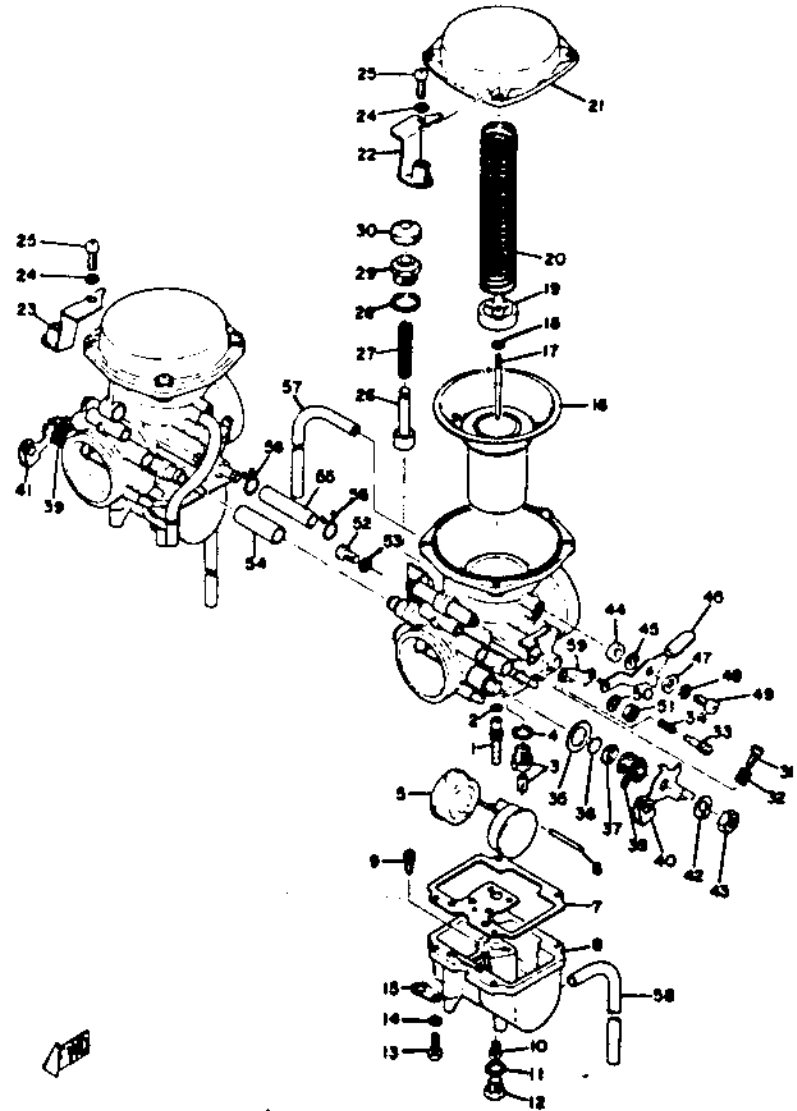

Ref. No.	Part Number	Description	A	B
38	306-14961-00-00	. SPRING, throttle left	1	1
39	306-14960-00-00	. SPRING, throttle right	1	1
40	306-14964-00-00	. LEVER, throttle left	1	1
41	306-14963-00-00	. LEVER, throttle right	1	1
42	256-14953-00-00	. WASHER	2	2
43	95301-12600-00	. NUT (98801-12200)	2	2
44	256-14918-00-00	. RING.....	1	1
45	256-14955-00-00	. WASHER	1	1
46	306-14905-02-00	. LEVER ASS'Y.....	1	1
47	256-14952-00-00	. WASHER	1	1
48	92901-04100-00	. WASHER, spring..	1	1

TX650A/XS650

49	98501-04012-00	. SCREW, pan head	1	1
50	256-14973-00-00	. WASHER	1	1
51	95301-10700-00	. NUT (92801-10300)	1	1
52	98501-04012-00	. SCREW, pan head	3	3
53	92901-04100-00	. WASHER, spring...	3	3
54	306-14988-00-00	. PIPE, starter connecting	1	1
55	341-14196-00-00	. PIPE	1	1
56	341-14919-00-00	. CLIP	2	2
57	256-14197-01-00	. PIPE	2	2
58	256-14987-00-00	. PIPE	2	2
59	306-14975-00-00	. LEVER.....	1	1

TX650A/XS650B

CARBURETOR (MFR) (TYPE) (I.D. NUMBER) | Mikuni BS-38 447A1