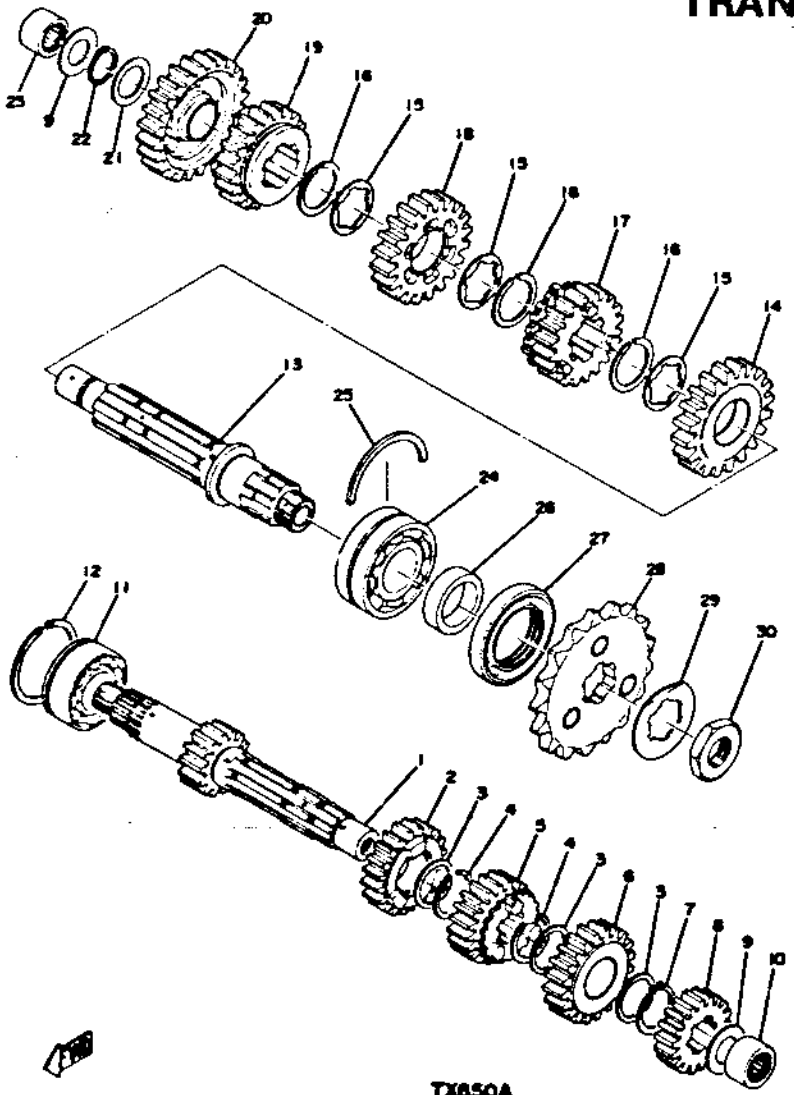

Ref. No.	Part Number	Description	A	B
1	306-17411-00-00	AXLE, main (13T)	1	1
2	256-17141-01-00	GEAR, 4th pinion (21T)	1	1
3	256-17154-00-10	WASHER, gear hold 5 (25.2-30-1.0).....	3	3
	256-17154-00-12	WASHER, gear hold 5 (25.2-30-1.2).....	3	3
4	93440-25020-00	CIRCLIP (25φ special)	2	2
5	256-17131-00-00	GEAR, 3rd pinion (20T)	1	1
6	99999-00906-00	GEAR 3rd & 5th pinion	1	1
	[256-17131-03-00]	GEAR, 3rd pinion...	1	1

TX650A/XS650

	341-17151-03-00	GEAR, 5th pinion...	1	1
7	93410-25017-00	CIRCLIP (S-25).....	1	1
8	256-17121-00-00	GEAR, 2nd pinion (17T)	1	1
9	137-17427-00-06	SHIM, drive axle (20.2-33-0.6).....	2	2
	137-17427-00-09	SHIM, drive axle (20.2-33-1.0).....	2	2
10	93313-32007-00	BEARING	1	1
11	93305-20504-00	BEARING (5205)	1	1
12	93440-52014-00	CIRCLIP (52φ special)	1	1

TX650A/XS650B

TX650A

SECONDARY (TYPE) (TEETH) (RATIO)	DK530HDS	103 Links	34/17	2.000:1

XS650B

Secondary (type) (teeth) (ratio)	DID530HDS, 103L	34/17	2.000

TX650A/XS650B

DRIVE – Primary (type) (teeth) (ratio)	Spur Gear	72/27	2.667
Transmission Ratio (teeth) (ratio) (O.A.)	32/13	2.461	11.356
2nd	27/17	1.588	6.470
3rd	26/20	1.300	5.833
4th	23/21	1.095	5.041
5th	22/23	0.956	5.101

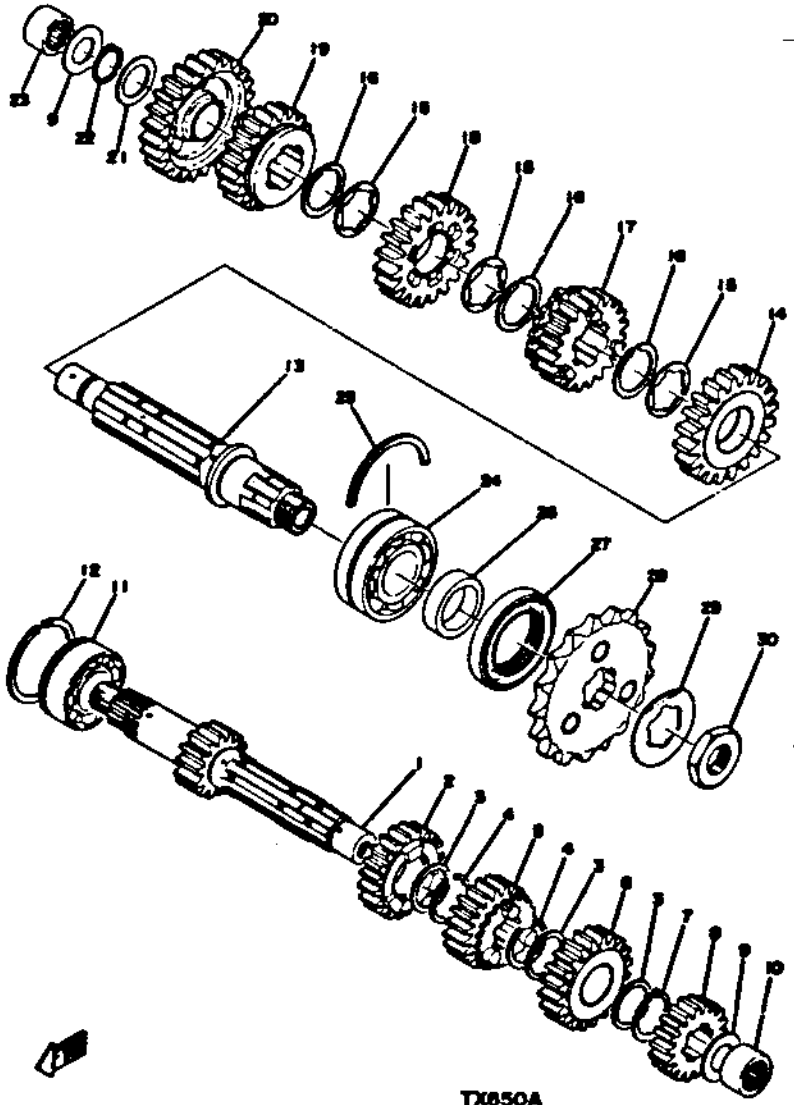

Ref. No.	Part Number	Description	A	B
13	256-17421-00-00	AXLE, drive	1	1
14	99999-00977-00	GEAR, 2nd 3rd & 5th wheel	1	1
	256-17231-03-00	. GEAR, 3rd wheel	1	1
	256-17251-03-00	. GEAR, 5th wheel	1	1
	256-17221-01-00	. GEAR, 2nd wheel	1	1
15	256-17236-00-10	WASHER, gear hold 3 (26.2-34-2.0)	3	3
	256-17236-00-12	WASHER, gear hold 3 (26.2-34-1.2)	3	3

TX650A/XS650

16	93440-30015-00	CIRCLIP (30II special)	3	3
17	99999-00977-00	GEAR, 2nd 3rd & 5th wheel	1	1
	256-17231-03-00	. GEAR, 3rd wheel	1	1
	256-17251-03-00	. GEAR, 5th wheel	1	1
	256-17221-01-00	. GEAR, 2nd wheel	1	1
18	99999-00977-00	GEAR, 2nd 3rd & 5th wheel	1	1
	256-17231-03-00	. GEAR, 3rd wheel	1	1
	256-17251-03-00	. GEAR, 5th wheel	1	1
	256-17221-01-00	. GEAR, 2nd wheel	1	1

TX650A/XS650B

TX650A

SECONDARY (TYPE) (TEETH) (RATIO)	DK530HDS	103 Links	34/17	2.000:1

TRANSMISSION TX650A/XS650B

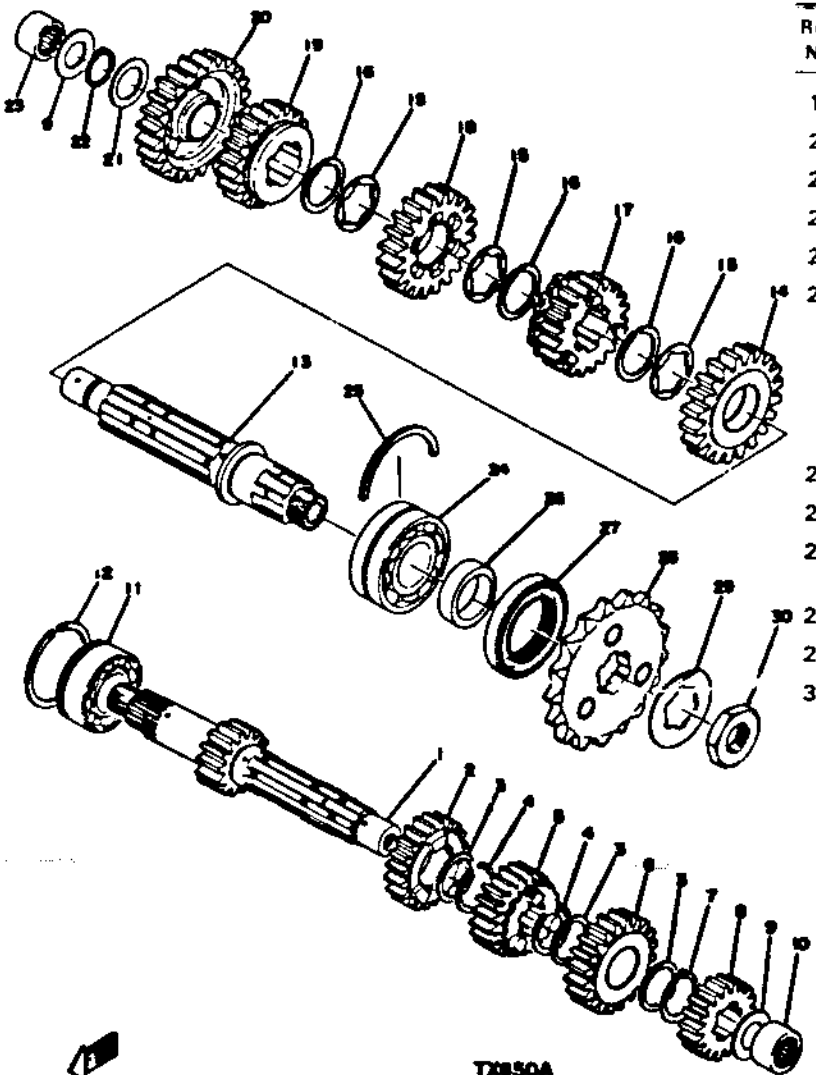

Ref. No.	Part Number	Description	A	B
19	256-17241-01-00	GEAR, 4th wheel (23T)	1	1
20	306-17211-00-00	GEAR, 1st wheel (32T)	1	1
21	90201-20266-00	WASHER, plate	1	1
22	93410-20021-00	CIRCLIP (S-20).....	1	1
23	93313-32005-00	BEARING	1	1
25	93305-20602-00	BEARING (5206 special).....	1	1

TX650A/XS650

25	168-17424-00-00	CIRCLIP	1	1
26	90387-30200-00	COLLAR.....	1	1
27	93105-40018-00	OIL SEAL (SDD-40-62-9)	1	1
28	256-17461-71-00	SPROCKET, drive (17T)	1	1
29	90215-26024-00	WASHER, lock.....	1	1
30	90179-22022-00	NUT.....	1	1

TX650A/XS650B